GRIGLIATI BALDASSAR S.R.L.
Via E. Maiorana, 13
31025 Santa Lucia di Piave (TV), Italy
T: +39 0438 450850
F: +39 0438 450811
www.grigliatibaldassar.com

GRATINGS FENCES BUILDINGS

Clear

124x44 mm mesh
25x2 mm bearing bar

ITEM SPECIFICATIONS

THE BALDASSAR **CLEAR** FENCE MODEL CONSISTS OF ELECTRO-WELDED GRATING PANELS IN S235JR (UNI EN 10025) STEEL WITH A 124 X 44 MM MODEL, HORIZONTAL BEARING BARS WITH A 25 X 2 MM CROSS-SECTION AND A VERTICAL ROUND CONNECTION WITH A 5 MM DIAMETER, AN **UPPER AND LOWER STEEL BANDING BAR** WITH A 25 X 4 MM CROSS-SECTION AND IS **MANUALLY WIRE-WELDED TO INCREASE THE PRODUCT'S RESISTANCE.** IT COMES WITH STEEL POSTS COMPRISING A 60 X 7 MM CROSS-SECTION BAR, IN ADDITION TO M8 X 30 STAINLESS STEEL ROUNDED HEADS AND BOLTS. ALL THE ELEMENTS ARE HOT DIP-GALVANISED IN ACCORDANCE WITH THE UNI EN ISO 1461 STANDARDS.

FEATURES

MATERIAL
S 235 JR (UNI EN 10025:1995) steel

SURFACE TREATMENT
Hot dip-galvanised *post-processing*
UNI EN ISO 1461:2009

COATING
A polyester resin powder coating - suitable for outdoor use - is applied on the *post-processing* hot dip-galvanised material

AVAILABLE RAI COLOURS

6005 *6029* *9010* *9005*

5010 *1023* *3002* *7016*

ACCESSORIES AND OPTIONAL EXTRAS

THE FOLLOWING ACCESSORIES ARE AVAILABLE:

- M8 x 30 round head stainless steel bolt with lock nut
- M8 x 30 stainless steel bolt with hex nut
- Other posts

GRIGLIATI BALDASSAR S.R.L.
Via E. Maiorana, 13
31025 Santa Lucia di Piave (TV), Italy
T: +39 0438 450850
F: +39 0438 450811
www.grigliatibaldassar.com

GRATINGS FENCES BUILDINGS

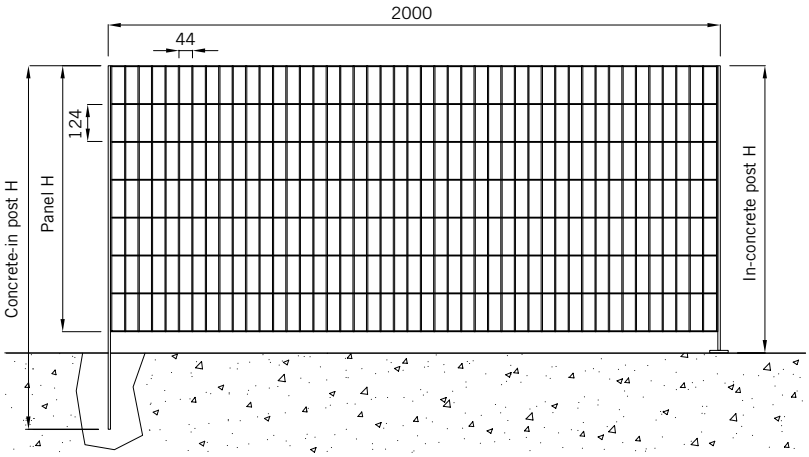

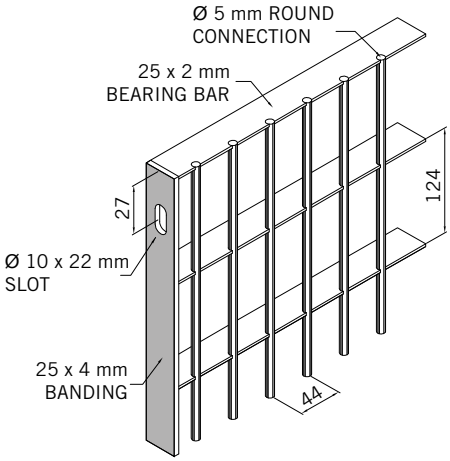

PANEL		POST	SCREW-ON		CONCRETE-IN	
HEIGHT (mm)	L=1990 weight (kg/each)	SECTION (mm)	HEIGHT (mm)	weight (kg/each)	HEIGHT (mm)	weight (kg/each)
875	13.30	60 x 7	950	3.90	1130	4.10
1375	20.80	60 x 7	1440	5.70	1625	5.80
1870	28.30	60 x 7	1945	7.50	2135	7.60

FIXING ELEMENTS

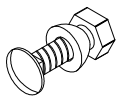

M8 x 30 round head bolt (optional) with shear nut.
Finish: galvanised/stainless steel.

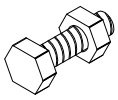

M8 x 30 bolt (standard) with hex nut.
Finish: galvanised/stainless steel.

GRIGLIATI BALDASSAR S.R.L.
Via E. Maiorana, 13
31025 Santa Lucia di Piave (TV), Italy
T: +39 0438 450850
F: +39 0438 450811
www.grigliatibaldassar.com

POSTS

The posts for the Clear fence model are made from a steel bar with a 60 x 7 mm cross-section and rounded heads. They are available in a concrete-in or screw-on version.

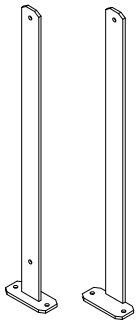

Standard and end post with a 60 x 7 mm cross-section to be set in concrete.
Material: S 235 JR (UNI EN 10025:1995) steel.
Treatment: hot dip-galvanised post-processing.
Coating: an outdoor-suitable polyester resin powder coating is applied on the galvanised material.

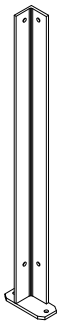

Standard corner post with a 60 x 60 x 6 mm cross-section to be set in concrete.
Material: S 235 JR (UNI EN 10025:1995) steel.
Treatment: hot dip-galvanised post-processing.
Coating: an outdoor-suitable polyester resin powder coating is applied on the galvanised material.

Standard post with a 60 x 7 mm cross-section to be embedded.
Material: S 235 JR (UNI EN 10025:1995) steel.
Treatment: hot dip-galvanised post-processing.
Coating: an outdoor-suitable polyester resin powder coating is applied on the galvanised material.

Standard corner post with a 60 x 60 x 6 mm cross-section to be embedded.
Material: S 235 JR (UNI EN 10025:1995) steel.
Treatment: hot dip-galvanised post-processing.
Coating: an outdoor-suitable polyester resin powder coating is applied on the galvanised material.